C.F.R. srl Modena - Italy	AC MOTOR IN WHEEL UNIT	CODE MRT23.AC001

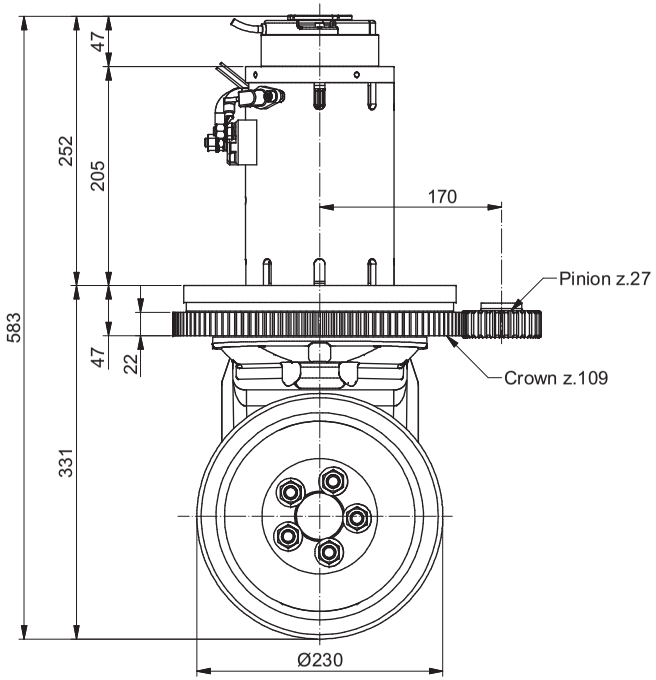

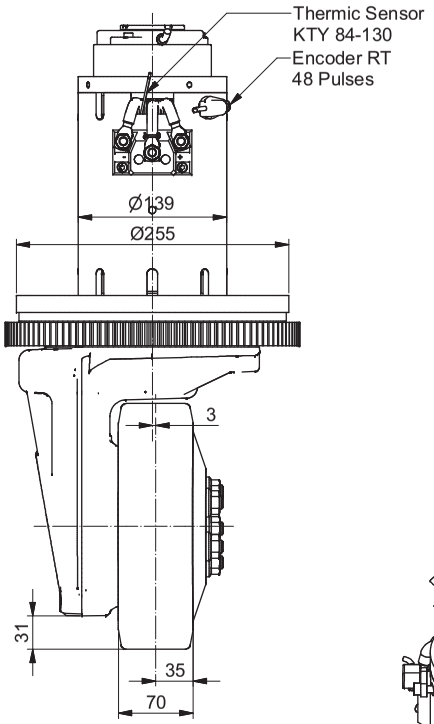

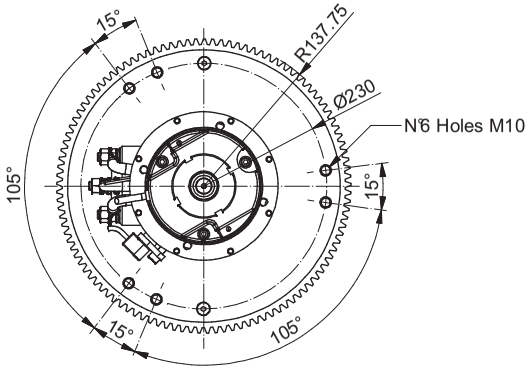

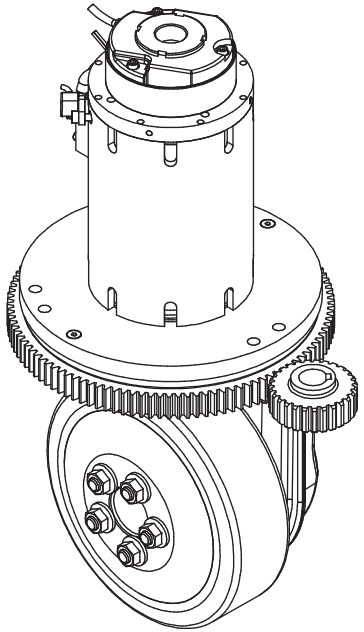

	Available on request
A	Motors: Permanent Magnet, Series Wound, Sepex, AC Asynchronous
B	Voltages: 24V, 36V, 48V, 72V, 80V, 96V
C	Gear Ratio: 1:25.08
D	Encoders application ; Thermic Sensor
E	Forced ventilation
F	

	Traction motor data		
1	Type : AC Asynchronous		
2	Power (S2 - 60 min)	W	1200
3	Motor voltage (~3)	V	16
4	Battery voltage	V	24
5	Speed	rpm	2800
6	Frequency	Hz	100
7	Current	A	71
8	Torque	Nm	4.1
9			
10			
11	Enclosure	IP	20
12	Brake torque	Nm	8
	Traction gear data		
13	Max input motor power	W	1500
14	Gear ratio	i	1:25.08
15	Max accel. and braking torque	Nm	380
16			
17	Nominal wheel torque	Nm	72
18			
19			
20			
21	Lubrication		Oil
22	Max load on vulkollan wheel	kg	
23	Max load on poliurethan wheel	kg	1000
24	Max load on solid rubber wheel	kg	
	Steering gearmotor data		
25	Type :		
26	Power (S2 - 60 min)	W	
27	Motor voltage (~3)	V	
28	Battery voltage	V	
29	Motor Speed	rpm	
30	Frequency	Hz	
31	Current	A	
32	Motor torque	Nm	
33	Enclosure	IP	
34			
35	Gear ratio	i	
36	Efficiency	η	

37	Total Weight	kg	52

C.F.R. srl Modena - Italy	AC MOTOR IN WHEEL UNIT	CODE MRT23.AC002

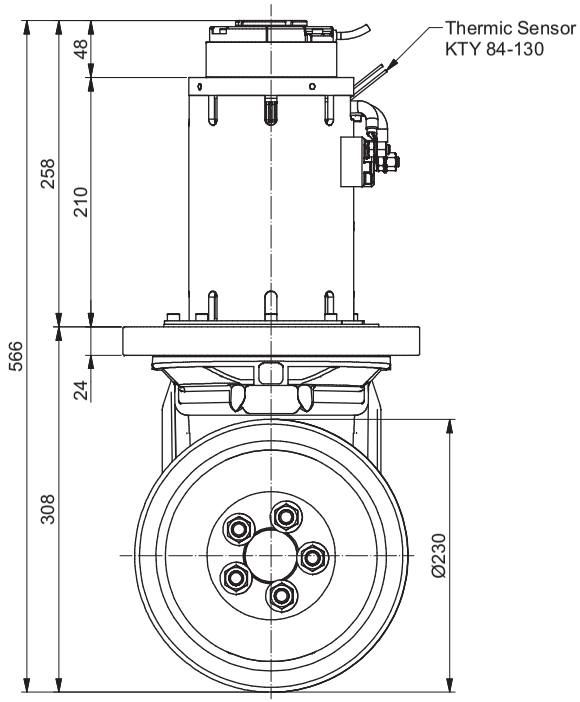

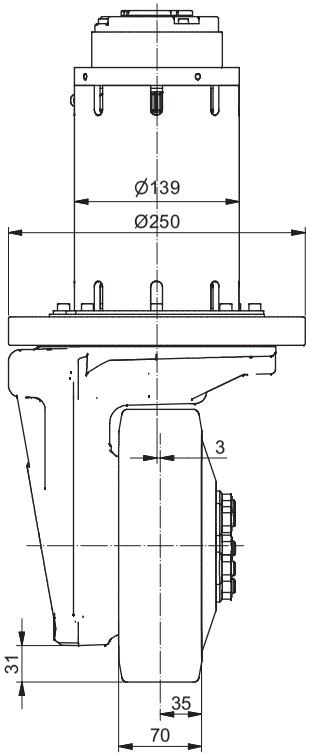

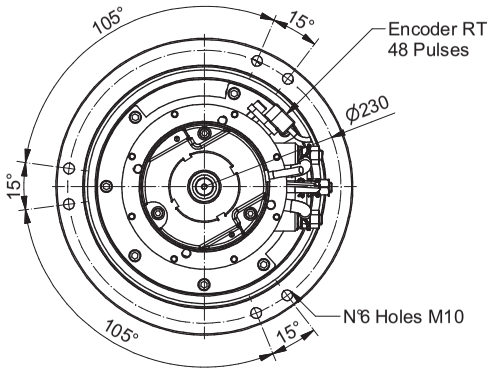

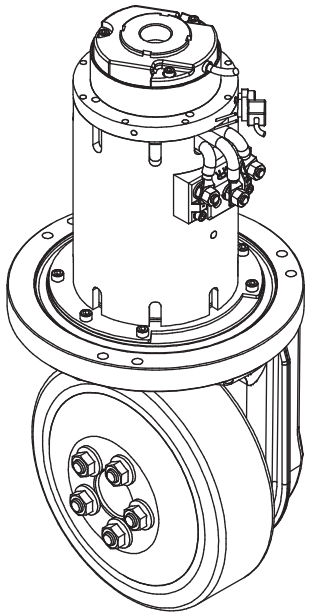

	Available on request
A	Motors: Permanent Magnet, Series Wound, Sepex, AC Asynchronous
B	Voltages: 24V, 36V, 48V, 72V, 80V, 96V
C	Gear Ratio: 1:25.08
D	Encoders application ; Thermic Sensor
E	Forced ventilation
F	

	Traction motor data		
1	Type : AC Asynchronous		
2	Power (S2 - 60 min)	W	1200
3	Motor voltage (~3)	V	16
4	Battery voltage	V	24
5	Speed	rpm	2800
6	Frequency	Hz	100
7	Current	A	71
8	Torque	Nm	4.1
9			
10			
11	Enclosure	IP	20
12	Brake torque	Nm	8
	Traction gear data		
13	Max input motor power	W	1500
14	Gear ratio	i	1:25.08
15	Max accel. and braking torque	Nm	380
16			
17	Nominal wheel torque	Nm	72
18			
19			
20			
21	Lubrication		Oil
22	Max load on vulkollan wheel	kg	
23	Max load on poliurethan wheel	kg	1000
24	Max load on solid rubber wheel	kg	
	Steering gearmotor data		
25	Type :		
26	Power (S2 - 60 min)	W	
27	Motor voltage (~3)	V	
28	Battery voltage	V	
29	Motor Speed	rpm	
30	Frequency	Hz	
31	Current	A	
32	Motor torque	Nm	
33	Enclosure	IP	
34			
35	Gear ratio	i	
36	Efficiency	η	

37	Total Weight	kg	52

C.F.R. srl Modena - Italy	AC MOTOR IN WHEEL UNIT	CODE MRT23.AC003

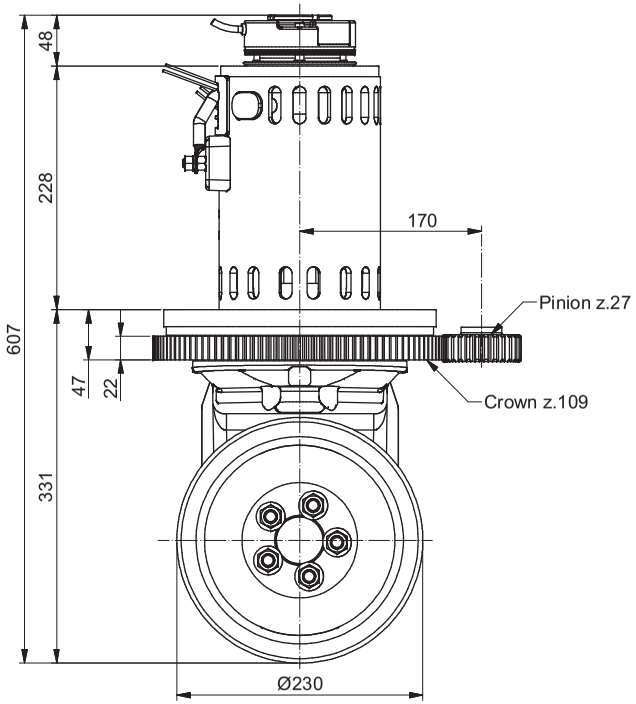

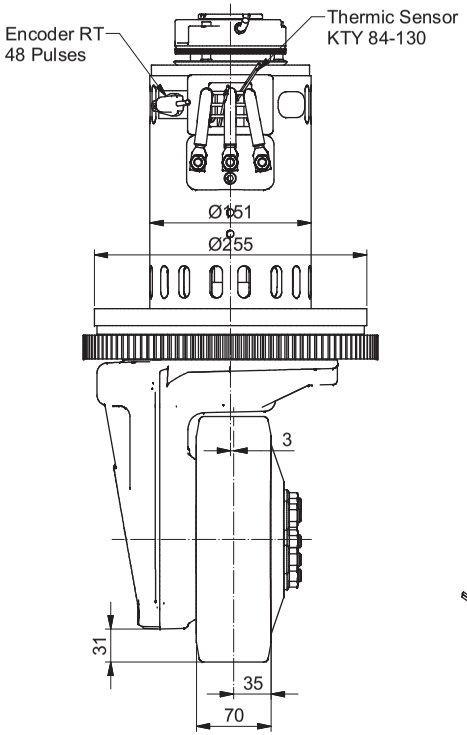

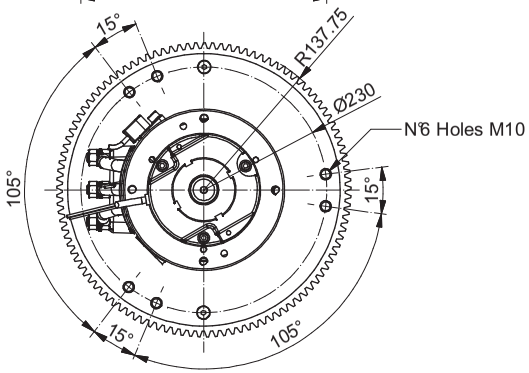

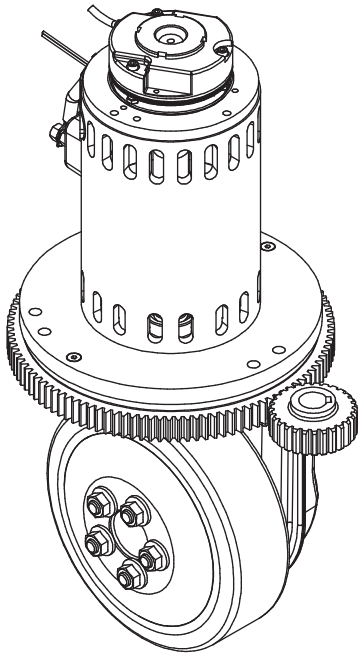

	Available on request
A	Motors: Permanent Magnet, Series Wound, Sepex, AC Asynchronous
B	Voltages: 24V, 36V, 48V, 72V, 80V, 96V
C	Gear Ratio: 1:25.08
D	Encoders application ; Thermic Sensor
E	Forced ventilation
F	

	Traction motor data		
1	Type : AC Asynchronous		
2	Power (S2 - 60 min)	W	1500
3	Motor voltage (~3)	V	16
4	Battery voltage	V	24
5	Speed	rpm	2800
6	Frequency	Hz	100
7	Current	A	89
8	Torque	Nm	5.1
9			
10			
11	Enclosure	IP	20
12	Brake torque	Nm	8
	Traction gear data		
13	Max input motor power	W	1500
14	Gear ratio	i	1:25.08
15	Max accel. and braking torque	Nm	380
16			
17	Nominal wheel torque	Nm	72
18			
19			
20			
21	Lubrication		Oil
22	Max load on vulkollan wheel	kg	
23	Max load on poliurethan wheel	kg	1000
24	Max load on solid rubber wheel	kg	
	Steering gearmotor data		
25	Type :		
26	Power (S2 - 60 min)	W	
27	Motor voltage (~3)	V	
28	Battery voltage	V	
29	Motor Speed	rpm	
30	Frequency	Hz	
31	Current	A	
32	Motor torque	Nm	
33	Enclosure	IP	
34			
35	Gear ratio	i	
36	Efficiency	η	

37	Total Weight	kg	59

C.F.R. srl Modena - Italy	AC MOTOR IN WHEEL UNIT	CODE MRT23.AC004

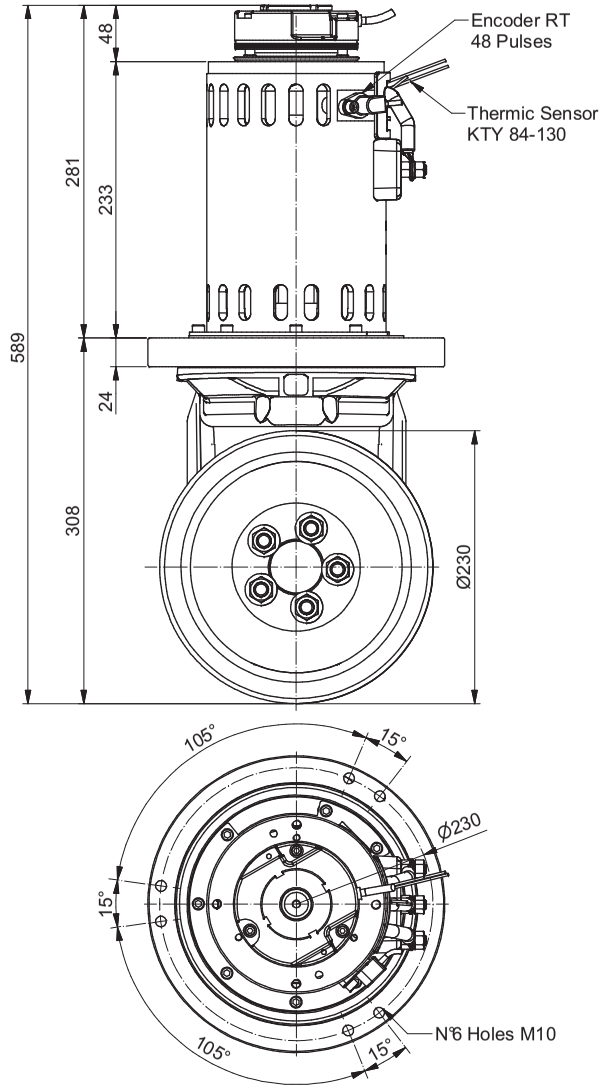

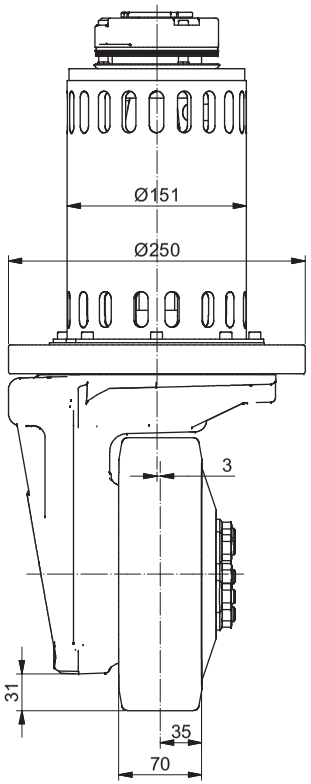

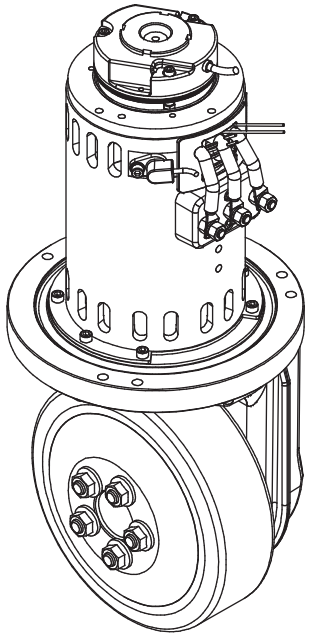

	Available on request
A	Motors: Permanent Magnet, Series Wound, Sepex, AC Asynchronous
B	Voltages: 24V, 36V, 48V, 72V, 80V, 96V
C	Gear Ratio: 1:25.08
D	Encoders application ; Thermic Sensor
E	Forced ventilation
F	

	Traction motor data		
1	Type : AC Asynchronous		
2	Power (S2 - 60 min)	W	1500
3	Motor voltage (~3)	V	16
4	Battery voltage	V	24
5	Speed	rpm	2800
6	Frequency	Hz	100
7	Current	A	89
8	Torque	Nm	5.1
9			
10			
11	Enclosure	IP	20
12	Brake torque	Nm	8
	Traction gear data		
13	Max input motor power	W	1500
14	Gear ratio	i	1:25.08
15	Max accel. and braking torque	Nm	380
16			
17	Nominal wheel torque	Nm	72
18			
19			
20			
21	Lubrication		Oil
22	Max load on vulkollan wheel	kg	
23	Max load on poliurethan wheel	kg	1000
24	Max load on solid rubber wheel	kg	
	Steering gearmotor data		
25	Type :		
26	Power (S2 - 60 min)	W	
27	Motor voltage (~3)	V	
28	Battery voltage	V	
29	Motor Speed	rpm	
30	Frequency	Hz	
31	Current	A	
32	Motor torque	Nm	
33	Enclosure	IP	
34			
35	Gear ratio	i	
36	Efficiency	η	

37	Total Weight	kg	59

C.F.R. srl Modena - Italy	AC MOTOR IN WHEEL UNIT	CODE MRT26.AC001

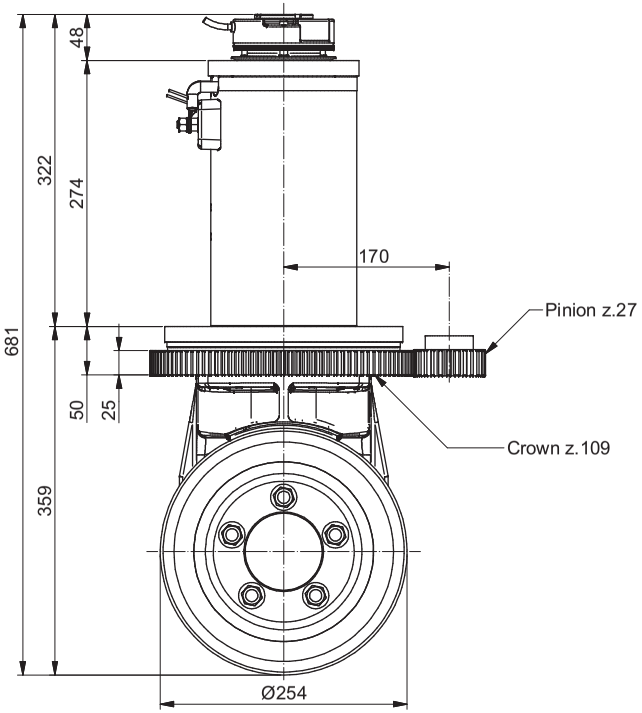

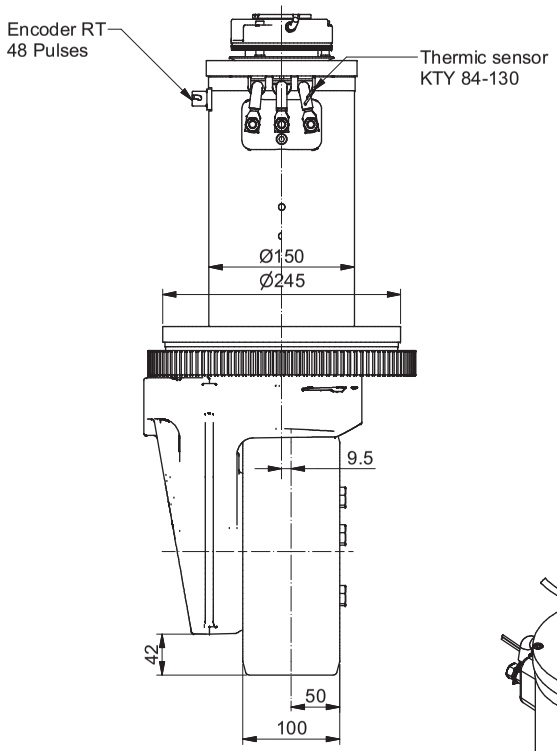

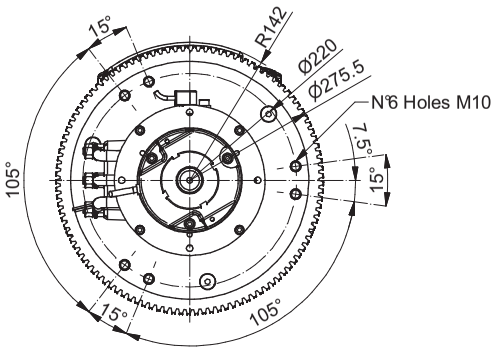

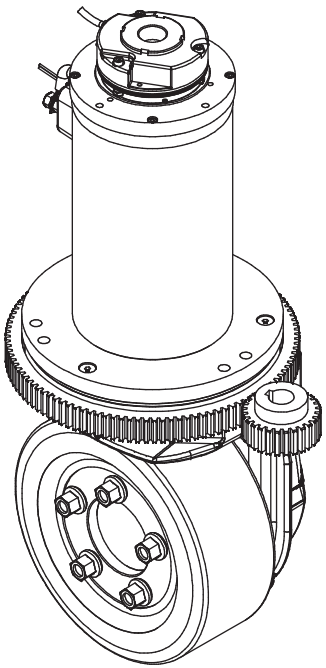

	Available on request
A	Motors: Permanent Magnet, Series Wound, Sepex, AC Asynchronous
B	Voltages: 24V, 36V, 48V, 72V, 80V, 96V
C	Gear Ratio: 1:24.1
D	Encoders application ; Thermic Sensor
E	Forced ventilation
F	

	Traction motor data		
1	Type : AC Asynchronous		
2	Power (S2 - 60 min)	W	2000
3	Motor voltage (~3)	V	16
4	Battery voltage	V	24
5	Speed	rpm	2800
6	Frequency	Hz	100
7	Current	A	119
8	Torque	Nm	6.8
9			
10			
11	Enclosure	IP	20
12	Brake torque	Nm	8
	Traction gear data		
13	Max input motor power	W	2600
14	Gear ratio	i	1:24.1
15	Max accel. and braking torque	Nm	490
16			
17	Nominal wheel torque	Nm	115
18			
19			
20			
21	Lubrication		Oil
22	Max load on vulkollan wheel	kg	1600
23	Max load on poliurethan wheel	kg	
24	Max load on solid rubber wheel	kg	
	Steering gearmotor data		
25	Type :		
26	Power (S2 - 60 min)	W	
27	Motor voltage (~3)	V	
28	Battery voltage	V	
29	Motor Speed	rpm	
30	Frequency	Hz	
31	Current	A	
32	Motor torque	Nm	
33	Enclosure	IP	
34			
35	Gear ratio	i	
36	Efficiency	η	

37	Total Weight	kg	70

C.F.R. srl Modena - Italy	AC MOTOR IN WHEEL UNIT	CODE MRT26.AC002

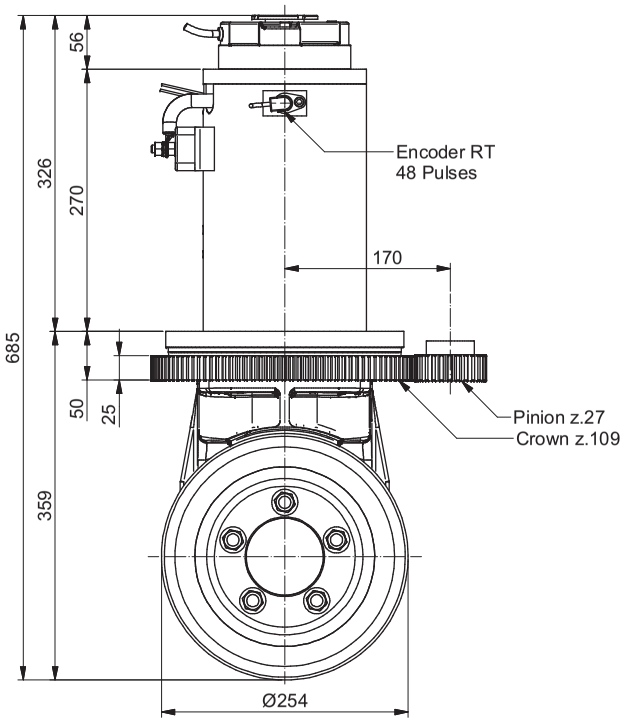

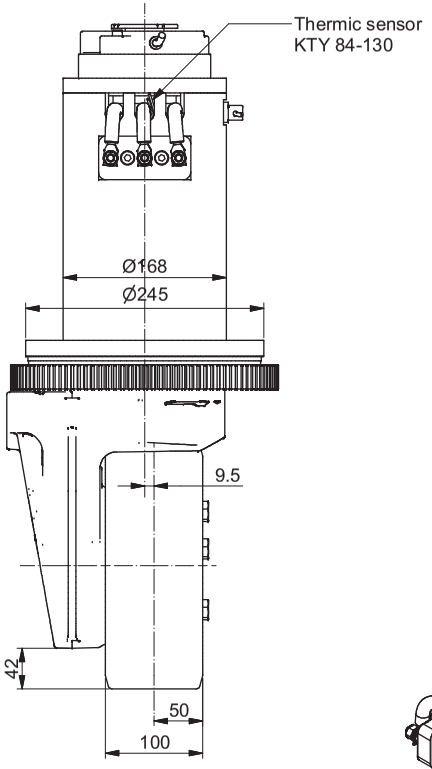

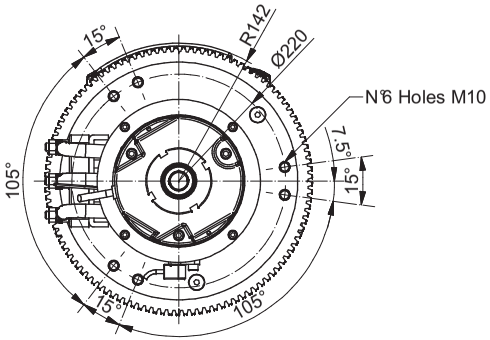

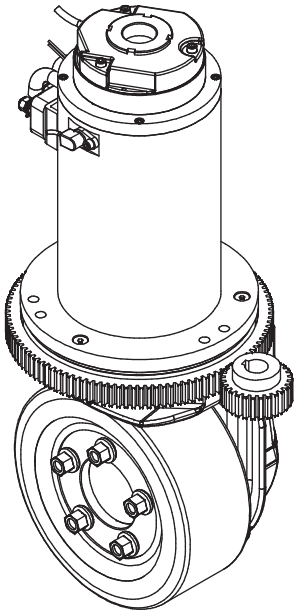

	Available on request
A	Motors: Permanent Magnet, Series Wound, Sepex, AC Asynchronous
B	Voltages: 24V, 36V, 48V, 72V, 80V, 96V
C	Gear Ratio: 1:24.1
D	Encoders application ; Thermic Sensor
E	Forced ventilation
F	

	Traction motor data		
1	Type : AC Asynchronous		
2	Power (S2 - 60 min)	W	2500
3	Motor voltage (~3)	V	27
4	Battery voltage	V	48
5	Speed	rpm	2900
6	Frequency	Hz	100
7	Current	A	74
8	Torque	Nm	8.2
9			
10			
11	Enclosure	IP	20
12	Brake torque	Nm	16
	Traction gear data		
13	Max input motor power	W	2600
14	Gear ratio	i	1:24.1
15	Max accel. and braking torque	Nm	490
16			
17	Nominal wheel torque	Nm	139
18			
19			
20			
21	Lubrication		Oil
22	Max load on vulkollan wheel	kg	1600
23	Max load on poliurethan wheel	kg	
24	Max load on solid rubber wheel	kg	
	Steering gearmotor data		
25	Type :		
26	Power (S2 - 60 min)	W	
27	Motor voltage (~3)	V	
28	Battery voltage	V	
29	Motor Speed	rpm	
30	Frequency	Hz	
31	Current	A	
32	Motor torque	Nm	
33	Enclosure	IP	
34			
35	Gear ratio	i	
36	Efficiency	η	

37	Total Weight	kg	77

C.F.R. srl Modena - Italy	AC MOTOR IN WHEEL UNIT	CODE MRT26.AC003

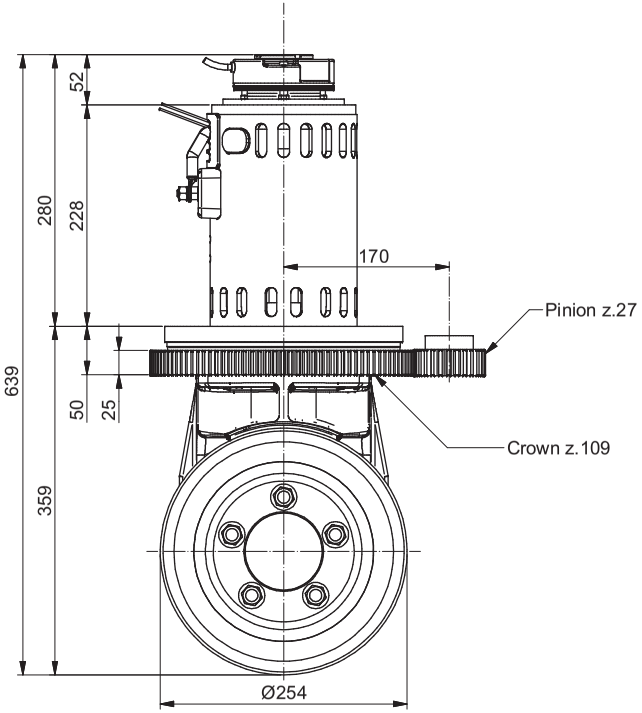

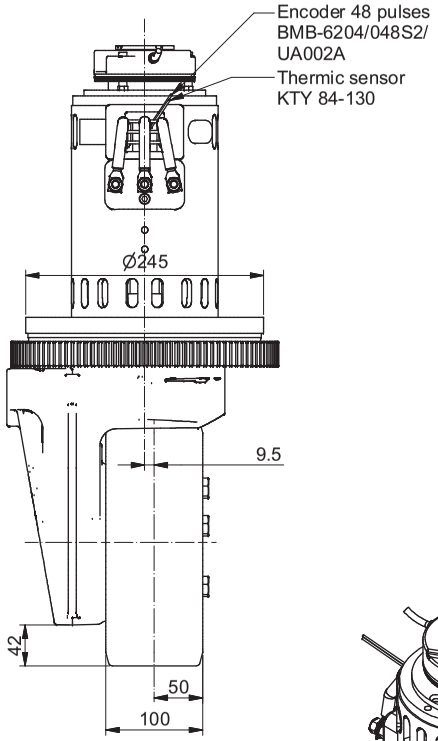

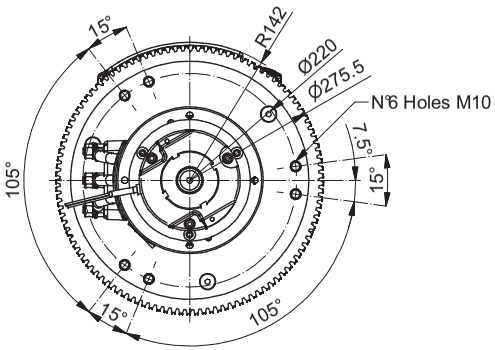

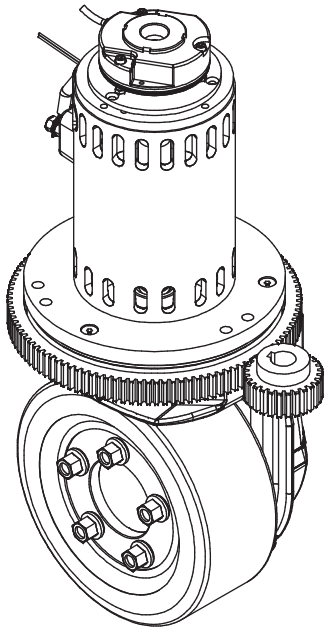

	Available on request
A	Motors: Permanent Magnet, Series Wound, Sepex, AC Asynchronous
B	Voltages: 24V, 36V, 48V, 72V, 80V, 96V
C	Gear Ratio: 1:24.1
D	Encoders application ; Thermic Sensor
E	Forced ventilation
F	

	Traction motor data		
1	Type : AC Asynchronous		
2	Power (S2 - 60 min)	W	1500
3	Motor voltage (~3)	V	16
4	Battery voltage	V	24
5	Speed	rpm	2800
6	Frequency	Hz	100
7	Current	A	89
8	Torque	Nm	5.1
9			
10			
11	Enclosure	IP	20
12	Brake torque	Nm	8
	Traction gear data		
13	Max input motor power	W	2600
14	Gear ratio	i	1:24.1
15	Max accel. and braking torque	Nm	490
16			
17	Nominal wheel torque	Nm	86
18			
19			
20			
21	Lubrication		Oil
22	Max load on vulkollan wheel	kg	1600
23	Max load on poliurethan wheel	kg	
24	Max load on solid rubber wheel	kg	
	Steering gearmotor data		
25	Type :		
26	Power (S2 - 60 min)	W	
27	Motor voltage (~3)	V	
28	Battery voltage	V	
29	Motor Speed	rpm	
30	Frequency	Hz	
31	Current	A	
32	Motor torque	Nm	
33	Enclosure	IP	
34			
35	Gear ratio	i	
36	Efficiency	η	

37	Total Weight	kg	70

C.F.R. srl Modena - Italy	AC MOTOR IN WHEEL UNIT	CODE MRT31.AC001

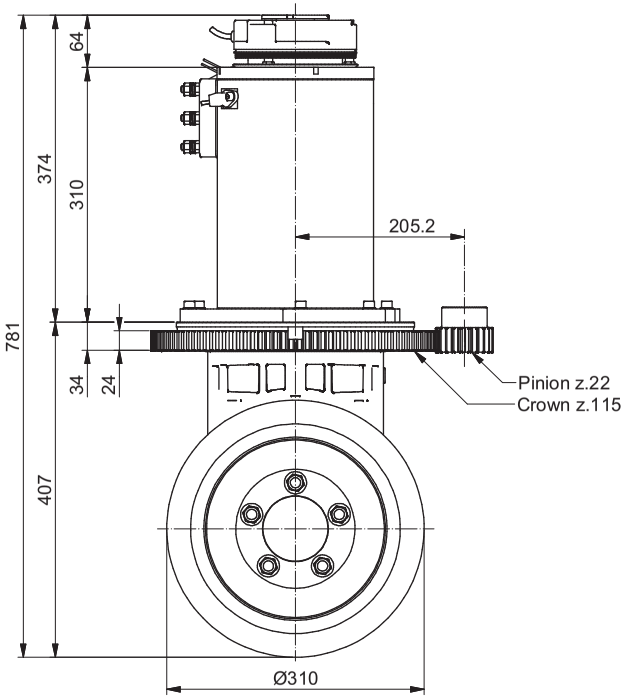

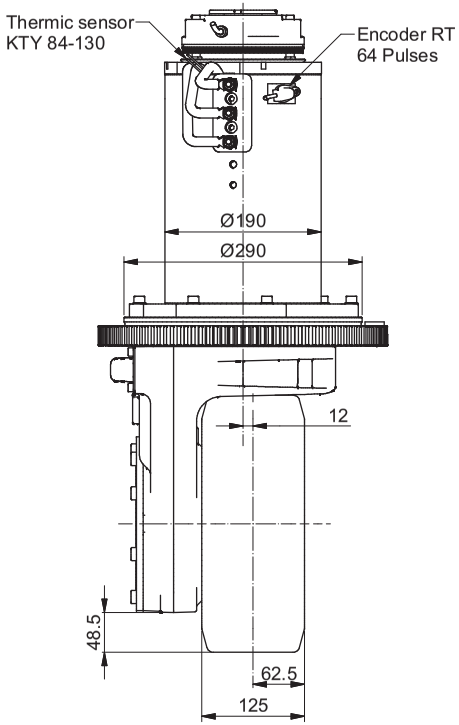

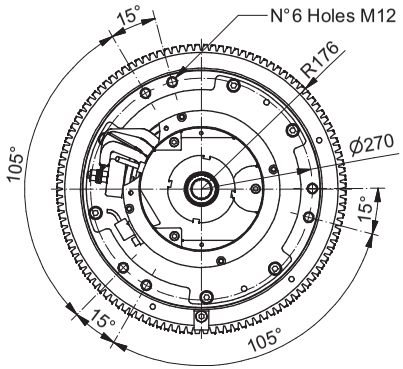

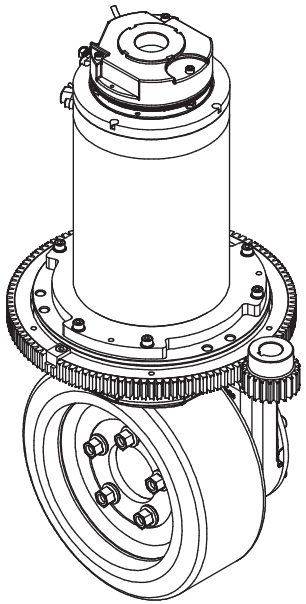

	Available on request
A	Motors: Permanent Magnet, Series Wound, Sepex, AC Asynchronous
B	Voltages: 24V, 36V, 48V, 72V, 80V, 96V
C	Gear Ratio: 1:25.4
D	Encoders application ; Thermic Sensor
E	Forced ventilation
F	

	Traction motor data		
1	Type : AC Asynchronous		
2	Power (S2 - 60 min)	W	4000
3	Motor voltage (~3)	V	16
4	Battery voltage	V	24
5	Speed	rpm	2850
6	Frequency	Hz	100
7	Current	A	238
8	Torque	Nm	13.4
9			
10			
11	Enclosure	IP	20
12	Brake torque	Nm	16
	Traction gear data		
13	Max input motor power	W	4000
14	Gear ratio	i	1:25.4
15	Max accel. and braking torque	Nm	940
16			
17	Nominal wheel torque	Nm	238
18			
19			
20			
21	Lubrication		Oil
22	Max load on vulkollan wheel	kg	2000
23	Max load on poliurethan wheel	kg	
24	Max load on solid rubber wheel	kg	
	Steering gearmotor data		
25	Type :		
26	Power (S2 - 60 min)	W	
27	Motor voltage (~3)	V	
28	Battery voltage	V	
29	Motor Speed	rpm	
30	Frequency	Hz	
31	Current	A	
32	Motor torque	Nm	
33	Enclosure	IP	
34			
35	Gear ratio	i	
36	Efficiency	η	

37	Total Weight	kg	120

C.F.R. srl Modena - Italy	AC MOTOR IN WHEEL UNIT	CODE MRT31.AC002

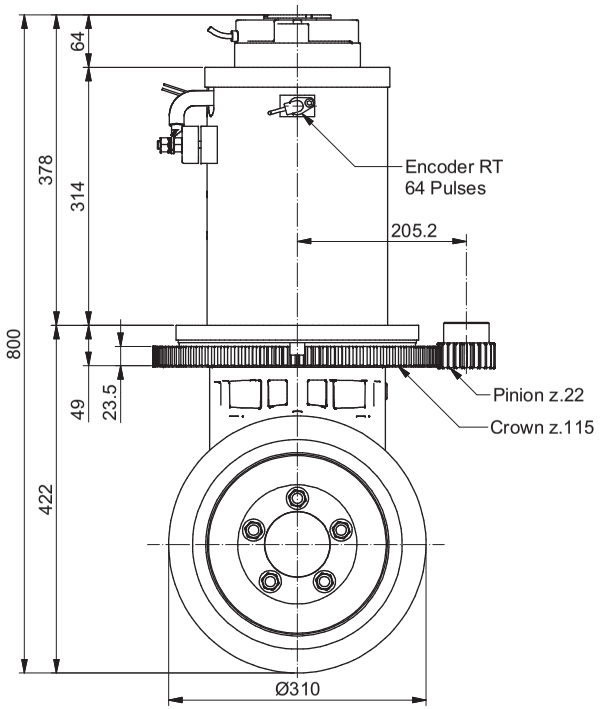

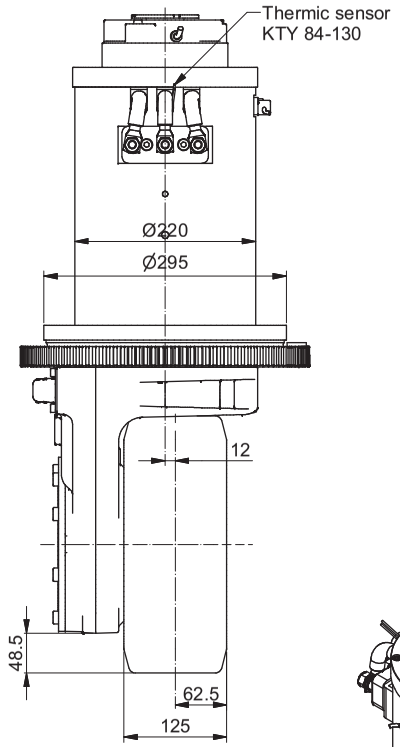

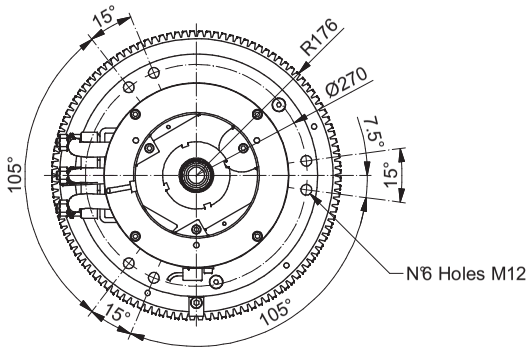

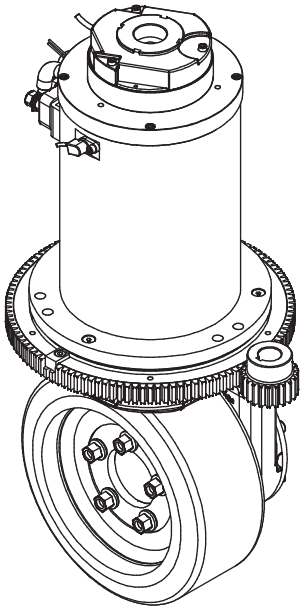

	Available on request
A	Motors: Permanent Magnet, Series Wound, Sepex, AC Asynchronous
B	Voltages: 24V, 36V, 48V, 72V, 80V, 96V
C	Gear Ratio: 1:25.4
D	Encoders application ; Thermic Sensor
E	Forced ventilation
F	

	Traction motor data		
1	Type : AC Asynchronous		
2	Power (S2 - 60 min)	W	6000
3	Motor voltage (~3)	V	27
4	Battery voltage	V	48
5	Speed	rpm	2850
6	Frequency	Hz	100
7	Current	A	179
8	Torque	Nm	20.1
9			
10			
11	Enclosure	IP	20
12	Brake torque	Nm	32
	Traction gear data		
13	Max input motor power	W	6000
14	Gear ratio	i	1:25.4
15	Max accel. and braking torque	Nm	940
16			
17	Nominal wheel torque	Nm	357
18			
19			
20			
21	Lubrication		Oil
22	Max load on vulkollan wheel	kg	2000
23	Max load on poliurethan wheel	kg	
24	Max load on solid rubber wheel	kg	
	Steering gearmotor data		
25	Type :		
26	Power (S2 - 60 min)	W	
27	Motor voltage (~3)	V	
28	Battery voltage	V	
29	Motor Speed	rpm	
30	Frequency	Hz	
31	Current	A	
32	Motor torque	Nm	
33	Enclosure	IP	
34			
35	Gear ratio	i	
36	Efficiency	η	

37	Total Weight	kg	140

C.F.R. srl Modena - Italy	AC MOTOR IN WHEEL UNIT	CODE MRT31.AC003

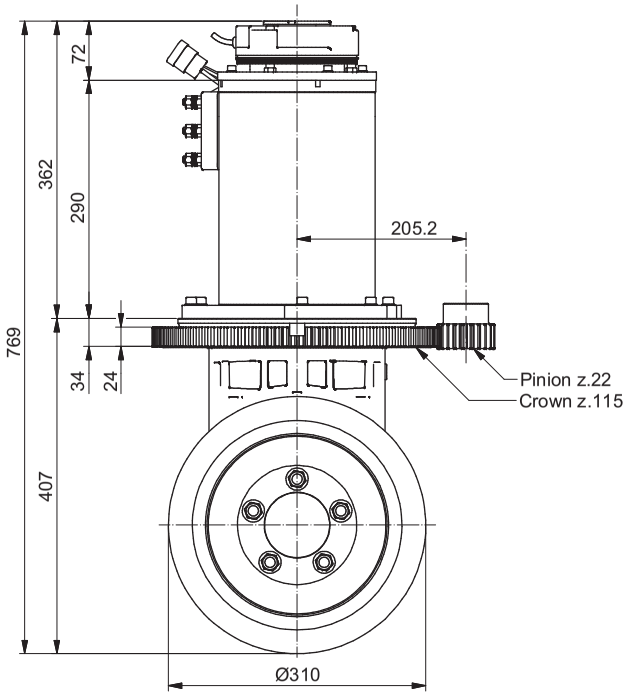

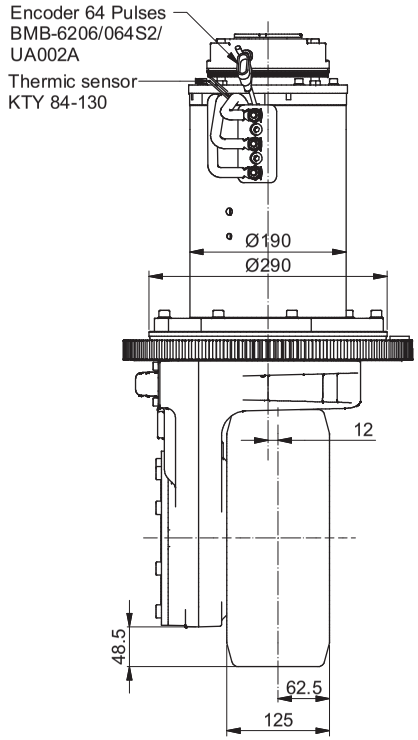

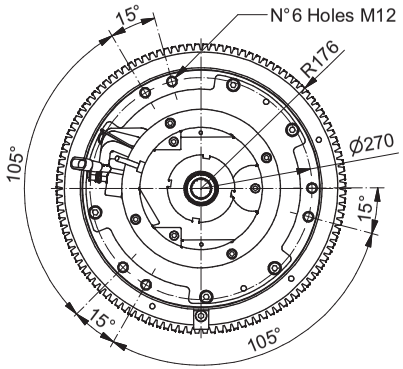

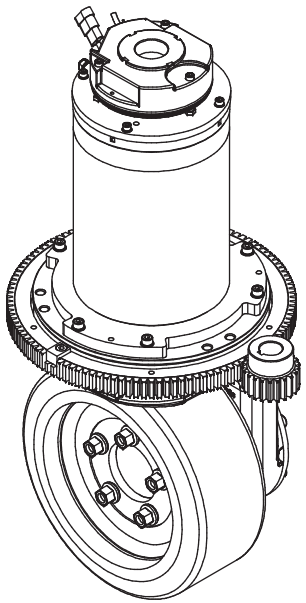

	Available on request
A	Motors: Permanent Magnet, Series Wound, Sepex, AC Asynchronous
B	Voltages: 24V, 36V, 48V, 72V, 80V, 96V
C	Gear Ratio: 1:25.4
D	Encoders application ; Thermic Sensor
E	Forced ventilation
F	

	Traction motor data		
1	Type : AC Asynchronous		
2	Power (S2 - 60 min)	W	4000
3	Motor voltage (~3)	V	16
4	Battery voltage	V	24
5	Speed	rpm	2850
6	Frequency	Hz	100
7	Current	A	238
8	Torque	Nm	13.4
9			
10			
11	Enclosure	IP	20
12	Brake torque	Nm	16
	Traction gear data		
13	Max input motor power	W	4000
14	Gear ratio	i	1:25.4
15	Max accel. and braking torque	Nm	940
16			
17	Nominal wheel torque	Nm	238
18			
19			
20			
21	Lubrication		Oil
22	Max load on vulkollan wheel	kg	2000
23	Max load on poliurethan wheel	kg	
24	Max load on solid rubber wheel	kg	
	Steering gearmotor data		
25	Type :		
26	Power (S2 - 60 min)	W	
27	Motor voltage (~3)	V	
28	Battery voltage	V	
29	Motor Speed	rpm	
30	Frequency	Hz	
31	Current	A	
32	Motor torque	Nm	
33	Enclosure	IP	
34			
35	Gear ratio	i	
36	Efficiency	η	

37	Total Weight	kg	118

C.F.R. srl Modena - Italy	AC MOTOR IN WHEEL UNIT	CODE MRT31.AC004

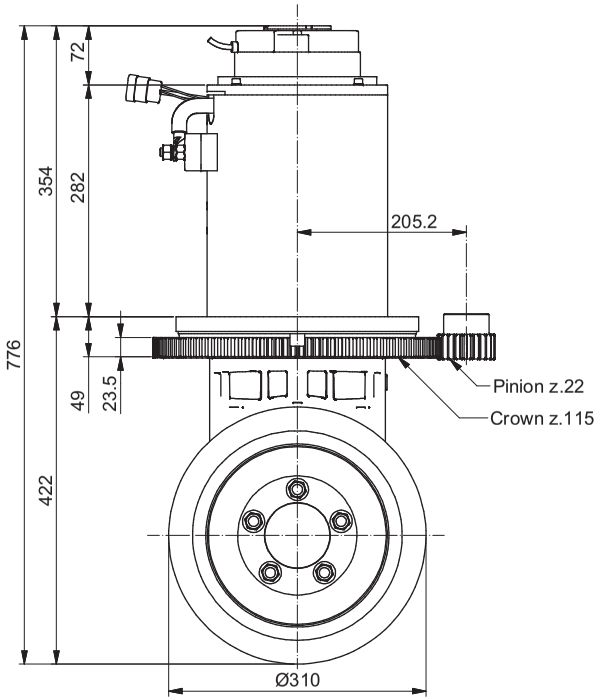

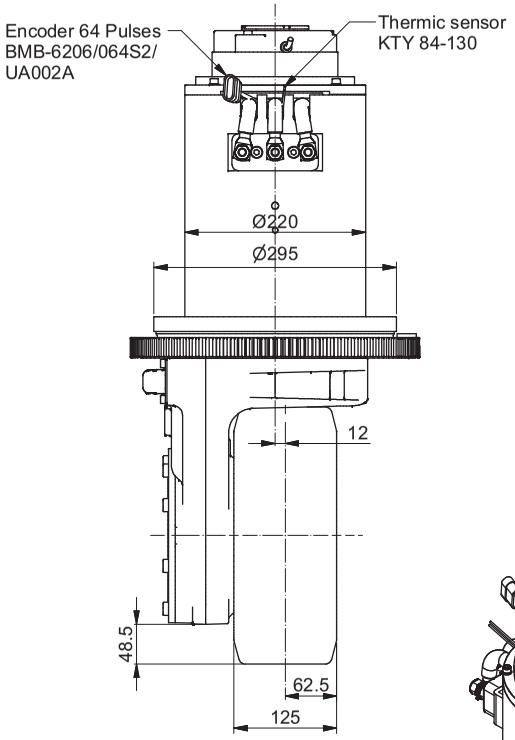

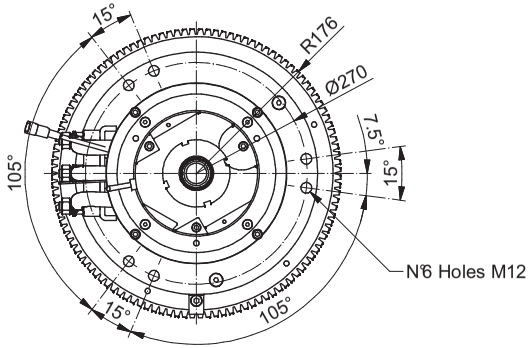

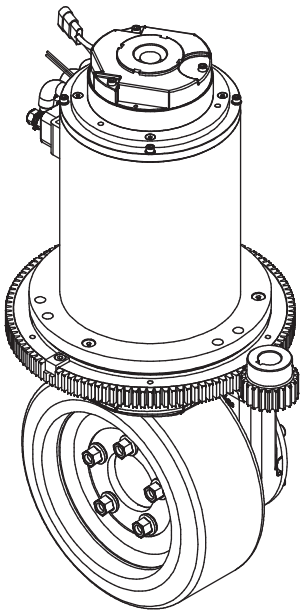

	Available on request
A	Motors: Permanent Magnet, Series Wound, Sepex, AC Asynchronous
B	Voltages: 24V, 36V, 48V, 72V, 80V, 96V
C	Gear Ratio: 1:25.4
D	Encoders application ; Thermic Sensor
E	Forced ventilation
F	

	Traction motor data		
1	Type : AC Asynchronous		
2	Power (S2 - 60 min)	W	6000
3	Motor voltage (~3)	V	27
4	Battery voltage	V	48
5	Speed	rpm	2850
6	Frequency	Hz	100
7	Current	A	179
8	Torque	Nm	20.1
9			
10			
11	Enclosure	IP	20
12	Brake torque	Nm	32
	Traction gear data		
13	Max input motor power	W	6000
14	Gear ratio	i	1:25.4
15	Max accel. and braking torque	Nm	940
16			
17	Nominal wheel torque	Nm	357
18			
19			
20			
21	Lubrication		Oil
22	Max load on vulkollan wheel	kg	2000
23	Max load on poliurethan wheel	kg	
24	Max load on solid rubber wheel	kg	
	Steering gearmotor data		
25	Type :		
26	Power (S2 - 60 min)	W	
27	Motor voltage (~3)	V	
28	Battery voltage	V	
29	Motor Speed	rpm	
30	Frequency	Hz	
31	Current	A	
32	Motor torque	Nm	
33	Enclosure	IP	
34			
35	Gear ratio	i	
36	Efficiency	η	

37	Total Weight	kg	138

C.F.R. srl Modena - Italy	AC MOTOR IN WHEEL UNIT	CODE MRT34.AC001

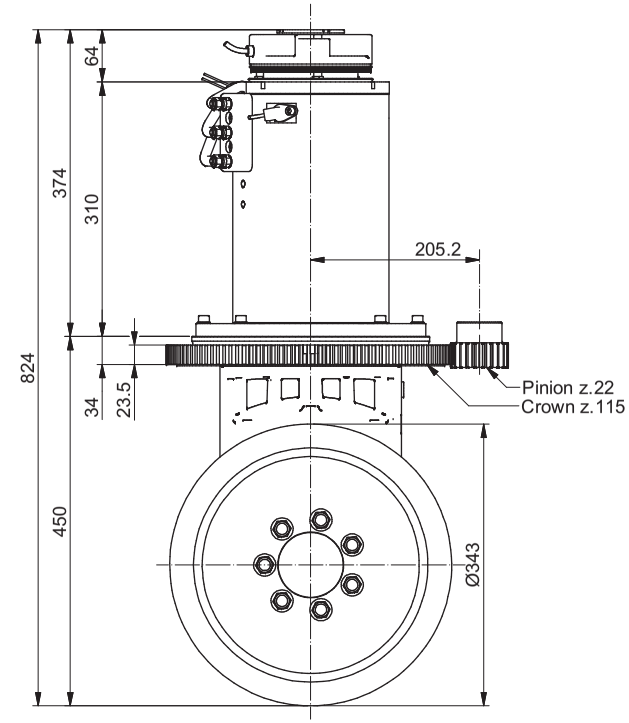

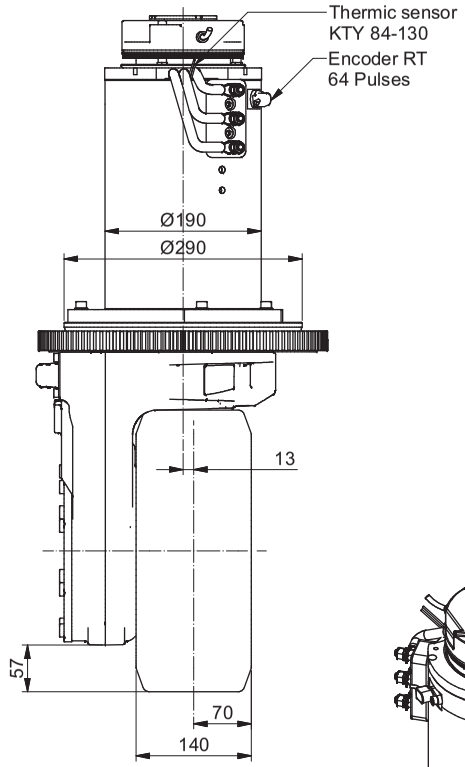

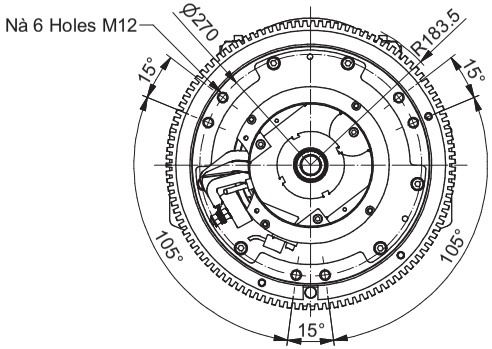

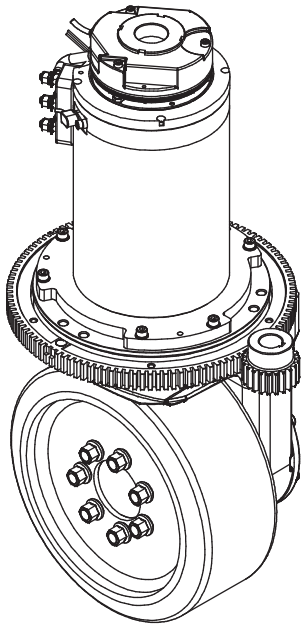

	Available on request
A	Motors: Permanent Magnet, Series Wound, Sepex, AC Asynchronous
B	Voltages: 24V, 36V, 48V, 72V, 80V, 96V
C	Gear Ratio: 1:22.9
D	Encoders application ; Thermic Sensor
E	Forced ventilation
F	

	Traction motor data		
1	Type : AC Asynchronous		
2	Power (S2 - 60 min)	W	4000
3	Motor voltage (~3)	V	27
4	Battery voltage	V	48
5	Speed	rpm	2850
6	Frequency	Hz	100
7	Current	A	119
8	Torque	Nm	13.4
9			
10			
11	Enclosure	IP	20
12	Brake torque	Nm	32
	Traction gear data		
13	Max input motor power	W	6000
14	Gear ratio	i	1:22.9
15	Max accel. and braking torque	Nm	1400
16			
17	Nominal wheel torque	Nm	215
18			
19			
20			
21	Lubrication		Oil
22	Max load on vulkollan wheel	kg	2800
23	Max load on poliurethan wheel	kg	
24	Max load on solid rubber wheel	kg	
	Steering gearmotor data		
25	Type :		
26	Power (S2 - 60 min)	W	
27	Motor voltage (~3)	V	
28	Battery voltage	V	
29	Motor Speed	rpm	
30	Frequency	Hz	
31	Current	A	
32	Motor torque	Nm	
33	Enclosure	IP	
34			
35	Gear ratio	i	
36	Efficiency	η	

37	Total Weight	kg	135

C.F.R. srl Modena - Italy	AC MOTOR IN WHEEL UNIT	CODE MRT34.AC002

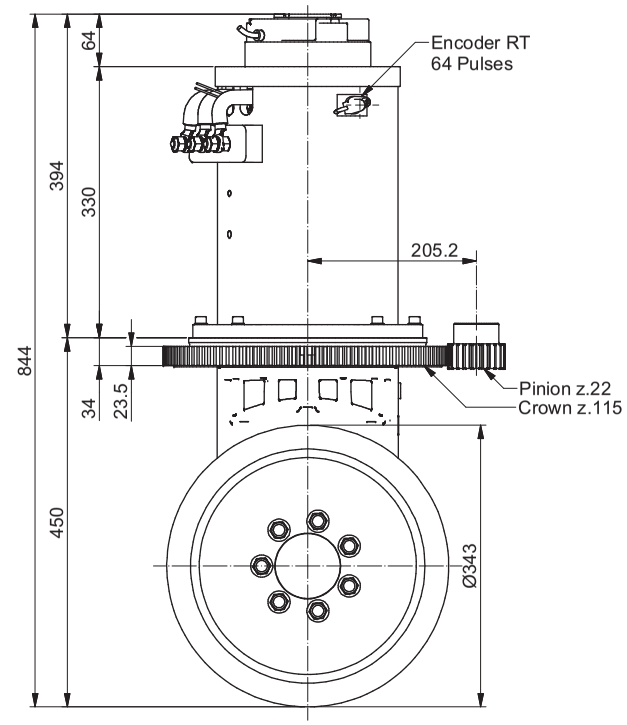

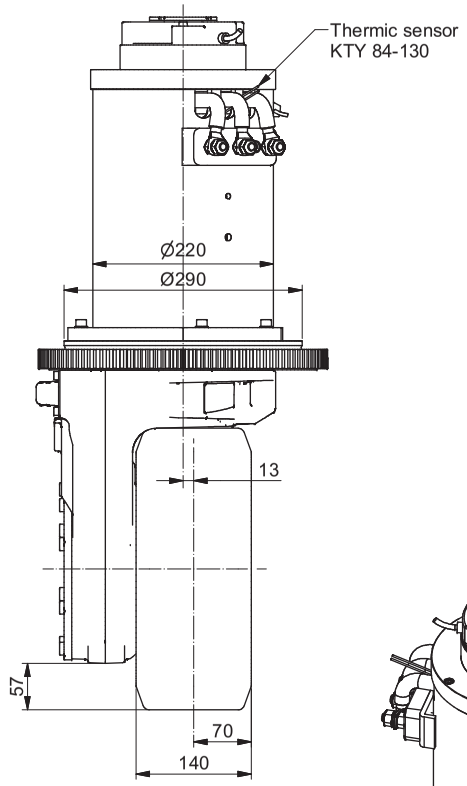

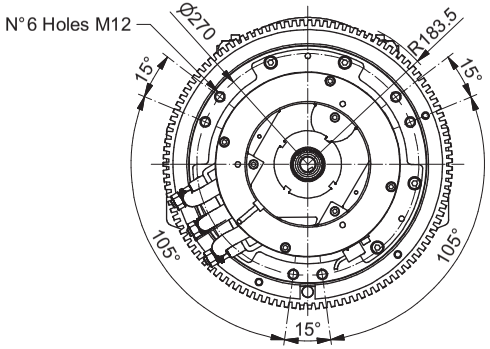

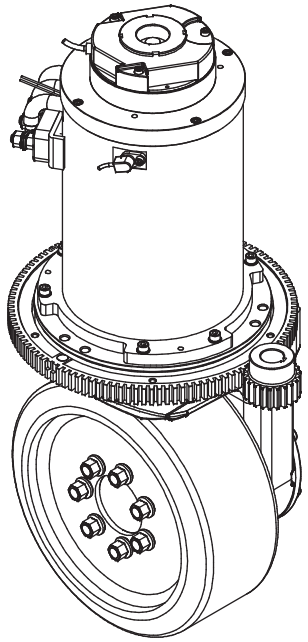

	Available on request
A	Motors: Permanent Magnet, Series Wound, Sepex, AC Asynchronous
B	Voltages: 24V, 36V, 48V, 72V, 80V, 96V
C	Gear Ratio: 1:22.9
D	Encoders application ; Thermic Sensor
E	Forced ventilation
F	

	Traction motor data		
1	Type : AC Asynchronous		
2	Power (S2 - 60 min)	W	6000
3	Motor voltage (~3)	V	27
4	Battery voltage	V	48
5	Speed	rpm	2850
6	Frequency	Hz	100
7	Current	A	179
8	Torque	Nm	20.1
9			
10			
11	Enclosure	IP	20
12	Brake torque	Nm	32
	Traction gear data		
13	Max input motor power	W	6000
14	Gear ratio	i	1:22.9
15	Max accel. and braking torque	Nm	1400
16			
17	Nominal wheel torque	Nm	322
18			
19			
20			
21	Lubrication		Oil
22	Max load on vulkollan wheel	kg	2800
23	Max load on poliurethan wheel	kg	
24	Max load on solid rubber wheel	kg	
	Steering gearmotor data		
25	Type :		
26	Power (S2 - 60 min)	W	
27	Motor voltage (~3)	V	
28	Battery voltage	V	
29	Motor Speed	rpm	
30	Frequency	Hz	
31	Current	A	
32	Motor torque	Nm	
33	Enclosure	IP	
34			
35	Gear ratio	i	
36	Efficiency	η	

37	Total Weight	kg	152

C.F.R. srl Modena - Italy	AC MOTOR IN WHEEL UNIT	CODE MRT34.AC003

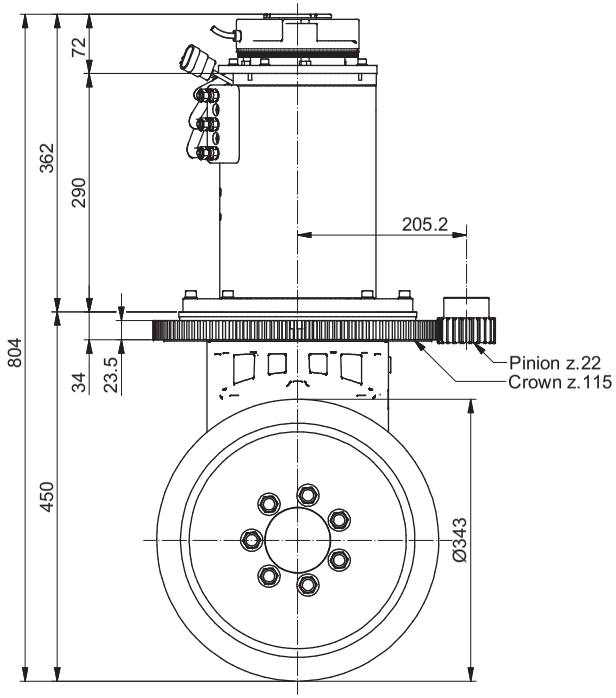

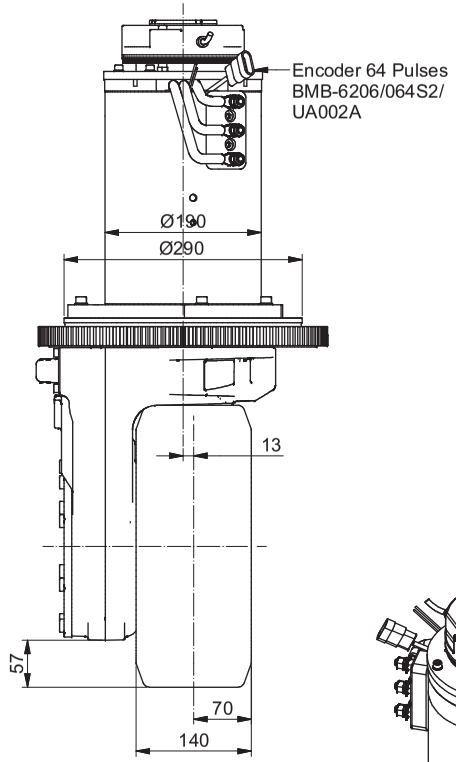

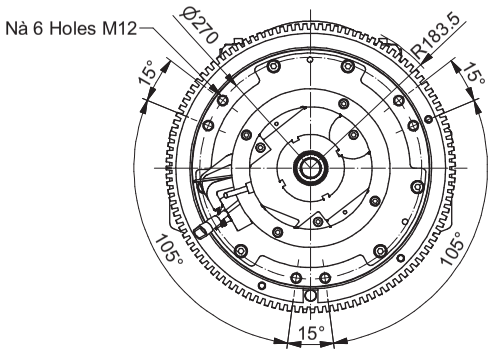

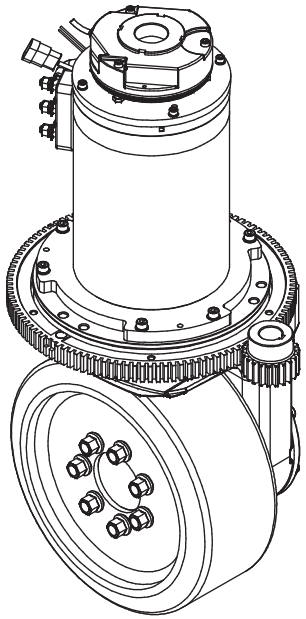

	Available on request
A	Motors: Permanent Magnet, Series Wound, Sepex, AC Asynchronous
B	Voltages: 24V, 36V, 48V, 72V, 80V, 96V
C	Gear Ratio: 1:22.9
D	Encoders application ; Thermic Sensor
E	Forced ventilation
F	

	Traction motor data		
1	Type : AC Asynchronous		
2	Power (S2 - 60 min)	W	4000
3	Motor voltage (~3)	V	27
4	Battery voltage	V	48
5	Speed	rpm	2850
6	Frequency	Hz	100
7	Current	A	119
8	Torque	Nm	13.4
9			
10			
11	Enclosure	IP	20
12	Brake torque	Nm	32
	Traction gear data		
13	Max input motor power	W	6000
14	Gear ratio	i	1:22.9
15	Max accel. and braking torque	Nm	1400
16			
17	Nominal wheel torque	Nm	215
18			
19			
20			
21	Lubrication		Oil
22	Max load on vulkollan wheel	kg	2800
23	Max load on poliurethan wheel	kg	
24	Max load on solid rubber wheel	kg	
	Steering gearmotor data		
25	Type :		
26	Power (S2 - 60 min)	W	
27	Motor voltage (~3)	V	
28	Battery voltage	V	
29	Motor Speed	rpm	
30	Frequency	Hz	
31	Current	A	
32	Motor torque	Nm	
33	Enclosure	IP	
34			
35	Gear ratio	i	
36	Efficiency	η	

37	Total Weight	kg	133

C.F.R. srl Modena - Italy	AC MOTOR IN WHEEL UNIT	CODE MRT34.AC004

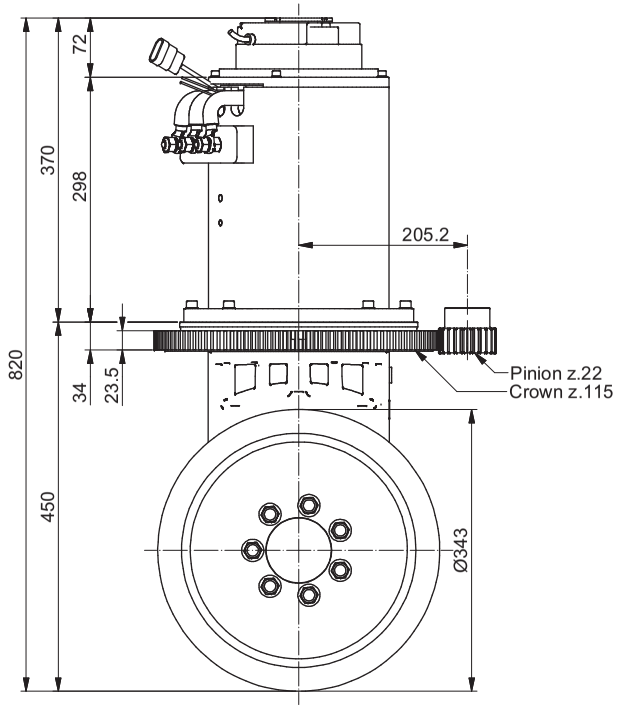

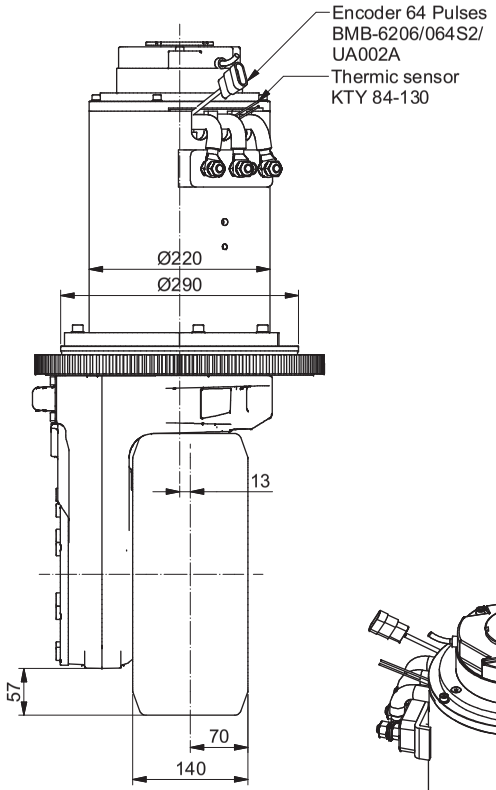

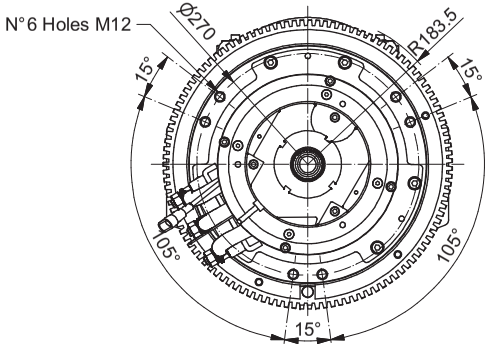

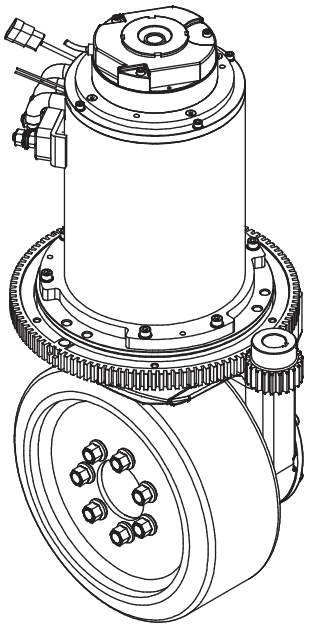

	Available on request
A	Motors: Permanent Magnet, Series Wound, Sepex, AC Asynchronous
B	Voltages: 24V, 36V, 48V, 72V, 80V, 96V
C	Gear Ratio: 1:22.9
D	Encoders application ; Thermic Sensor
E	Forced ventilation
F	

	Traction motor data		
1	Type : AC Asynchronous		
2	Power (S2 - 60 min)	W	6000
3	Motor voltage (~3)	V	27
4	Battery voltage	V	48
5	Speed	rpm	2850
6	Frequency	Hz	100
7	Current	A	179
8	Torque	Nm	20.1
9			
10			
11	Enclosure	IP	20
12	Brake torque	Nm	32
	Traction gear data		
13	Max input motor power	W	6000
14	Gear ratio	i	1:22.9
15	Max accel. and braking torque	Nm	1400
16			
17	Nominal wheel torque	Nm	322
18			
19			
20			
21	Lubrication		Oil
22	Max load on vulkollan wheel	kg	2800
23	Max load on poliurethan wheel	kg	
24	Max load on solid rubber wheel	kg	
	Steering gearmotor data		
25	Type :		
26	Power (S2 - 60 min)	W	
27	Motor voltage (~3)	V	
28	Battery voltage	V	
29	Motor Speed	rpm	
30	Frequency	Hz	
31	Current	A	
32	Motor torque	Nm	
33	Enclosure	IP	
34			
35	Gear ratio	i	
36	Efficiency	η	

37	Total Weight	kg	152

C.F.R. srl Modena - Italy	AC MOTOR IN WHEEL UNIT	CODE MRT40.AC001

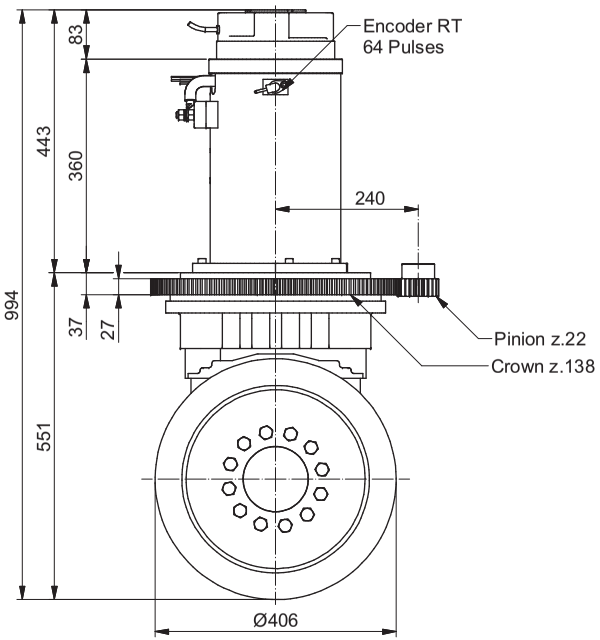

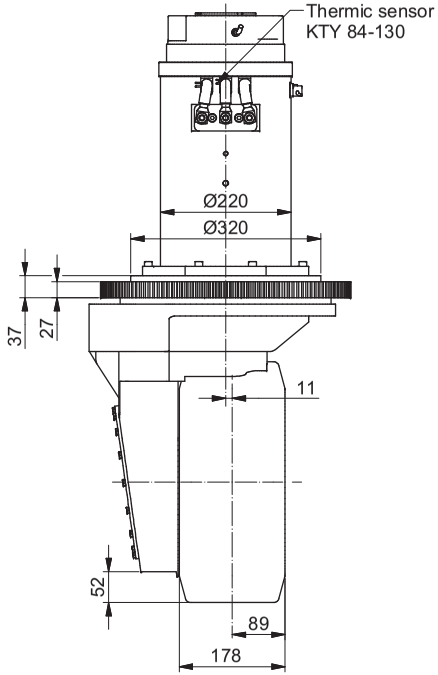

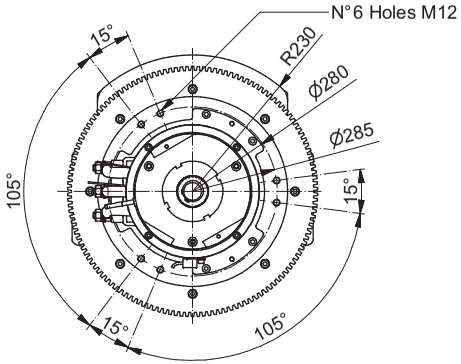

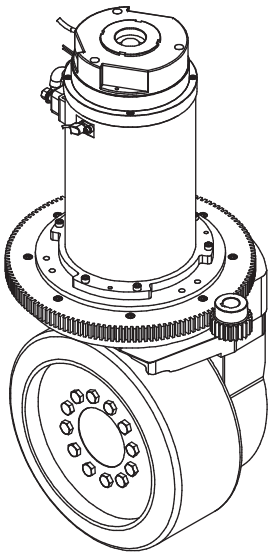

	Available on request
A	Motors: Permanent Magnet, Series Wound, Sepex, AC Asynchronous
B	Voltages: 24V, 36V, 48V, 72V, 80V, 96V
C	Gear Ratio: 1:19.9
D	Encoders application ; Thermic Sensor
E	Forced ventilation
F	

	Traction motor data		
1	Type : AC Asynchronous		
2	Power (S2 - 60 min)	W	8000
3	Motor voltage (~3)	V	27
4	Battery voltage	V	48
5	Speed	rpm	2000
6	Frequency	Hz	66
7	Current	A	238
8	Torque	Nm	38.2
9			
10			
11	Enclosure	IP	20
12	Brake torque	Nm	80
	Traction gear data		
13	Max input motor power	W	8000
14	Gear ratio	i	1:19.9
15	Max accel. and braking torque	Nm	2600
16			
17	Nominal wheel torque	Nm	532
18			
19			
20			
21	Lubrication		Oil
22	Max load on vulkollan wheel	kg	4000
23	Max load on poliurethan wheel	kg	
24	Max load on solid rubber wheel	kg	
	Steering gearmotor data		
25	Type :		
26	Power (S2 - 60 min)	W	
27	Motor voltage (~3)	V	
28	Battery voltage	V	
29	Motor Speed	rpm	
30	Frequency	Hz	
31	Current	A	
32	Motor torque	Nm	
33	Enclosure	IP	
34			
35	Gear ratio	i	
36	Efficiency	η	

37	Total Weight	kg	245

C.F.R. srl Modena - Italy	AC MOTOR IN WHEEL UNIT	CODE MRT40.AC002

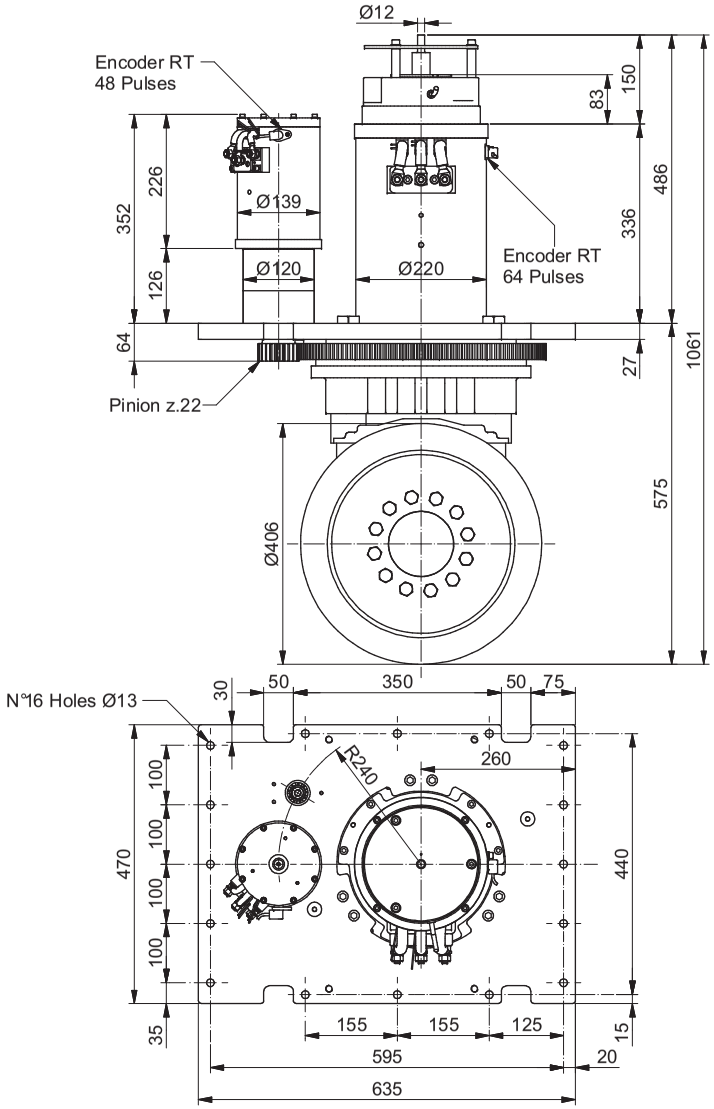

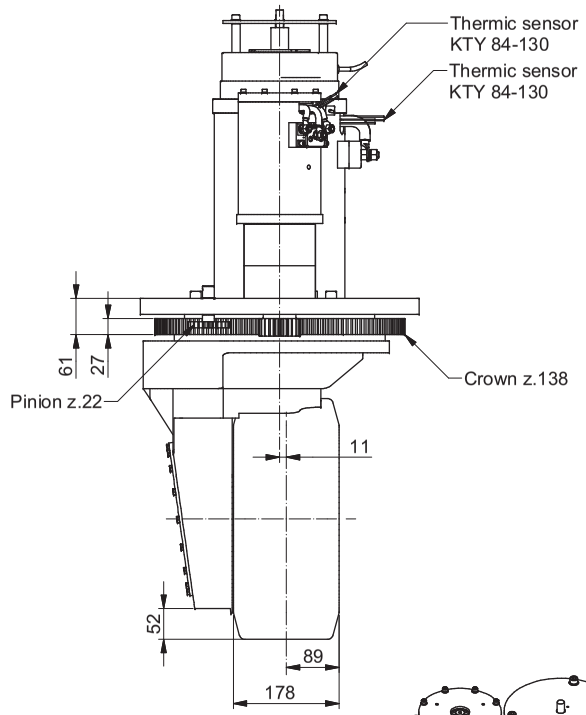

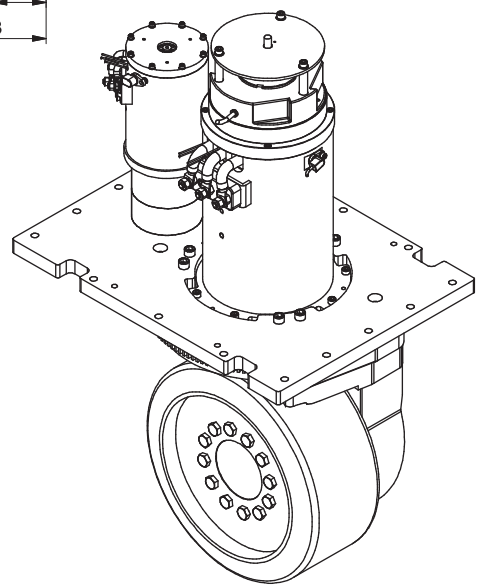

	Available on request
A	Motors: Permanent Magnet, Series Wound, Sepex, AC Asynchronous
B	Voltages: 24V, 36V, 48V, 72V, 80V, 96V
C	Gear Ratio: 1:19.9
D	Encoders application ; Thermic Sensor
E	Forced ventilation
F	

	Traction motor data		
1	Type : AC Asynchronous		
2	Power (S2 - 60 min)	W	6500
3	Motor voltage (~3)	V	27
4	Battery voltage	V	48
5	Speed	rpm	1600
6	Frequency	Hz	55
7	Current	A	193
8	Torque	Nm	38.8
9			
10			
11	Enclosure	IP	20
12	Brake torque	Nm	80
	Traction gear data		
13	Max input motor power	W	8000
14	Gear ratio	i	1:19.9
15	Max accel. and braking torque	Nm	2600
16			
17	Nominal wheel torque	Nm	540
18			
19			
20			
21	Lubrication		Oil
22	Max load on vulkollan wheel	kg	4000
23	Max load on poliurethan wheel	kg	
24	Max load on solid rubber wheel	kg	
	Steering gearmotor data		
25	Type :		
26	Power (S2 - 60 min)	W	1400
27	Motor voltage (~3)	V	27
28	Battery voltage	V	48
29	Motor Speed	rpm	3000
30	Frequency	Hz	100
31	Current	A	42
32	Motor torque	Nm	4.4
33	Enclosure	IP	23
34			
35	Gear ratio	i	1:25
36	Efficiency	η	0.75

37	Total Weight	kg	310